## *dynamx*™ variable flow-control valves, series DXMB_C

**DXMB2D032C**

- Electronic pressure-independent flow control
- 2-port or 3-port flow control valves
- Integrated flow measurement
- Integrated ΔT measurement
- Power supply $U_v$ : AC/DC 24Volt
- Flow setpoint via ctrl signal $Y_1$ : 0..10Vdc or digital
- MP *MultiProtocol* : MODBUS RTU and BACnet MSTP communication
- Wireless commissioning through Bluetooth® communication
- Available with integrated application control functions [1)]

0..20'000 l/h

DN15..DN50

### Dynamic Flow Networking®

The *dynamx*™ flow-control valves are designed for automatic and dynamic hydronic balancing and real-time flow-control at the same time, thus eliminating the need for extra balancing valves. The *dynamx*™ flow-control valves provide a perfect hydraulic balance in the hydraulic net, at full load as well as in part load, without any extra components: Dynamic Flow Networking® (DFN).

DFN ™

### Advantages

- 4-in-1 solution
- variable flow control
- automatic hydronic balancing
- no minimal Δp required
- flow and energy registration
- MP *MultiProtocol* on RS485-bus
- Bluetooth® communication on board
- patented technology EP230793

### Description

The *dynamx*™ Modular valves, series DXMB_C, are electronic, pressure-independent flow-control valves. They combine four functions in one device: 1) a flow-control valve, 2) a dynamic, pressure-independent balancing valve a 3) shut-off valve and 4) an energy-monitoring device.

DXMB_C is used in HVAC systems with variable flow and is designed e.g. for AHU, heat exchangers, etc. DXMB_C replaces the (static) balancing valve, as well as the control valve.

The DXMB_C series are available as 2-port or 3-port valves with different flow ranges for optimal sizing. DXMB_C can be used in HVAC systems for buildings with a nominal system pressure of 16 bar (PN16) and water temperatures: +2°C..+100°C [2)] (non-condensing).

### Content



1) option
2) the pressures mentioned are maximum values, limited by the maximum admissible temperatures in the pressure-temperature flowchart

## 1. How it works

The *dynamx*™ valves are designed to accurately control the flow through each consumer device. In order to achieve this, *dynamx*™ has 4 basic building blocks:

- a valve
- an actuator
- a flow sensor
- a flow controller

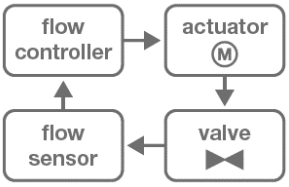


On top of these basic building blocks additional features can be added, like for example a water temperature controller.


In analog mode, the internal flow controller of the *dynamx*™ valve receives a setpoint from the external controller $Y_1$: 0..10Vdc. Internally this setpoint is converted into a flow setpoint, either for heating or cooling. Example:

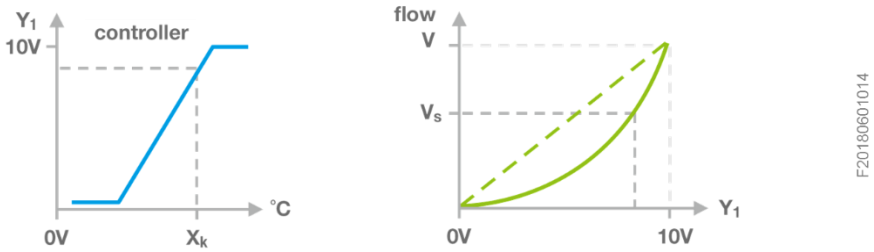


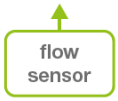


The integrated flow sensor measures continuously the actual flow. The intern control loop will compare the actual flow with the desired flow and adjust the position of the control valve until the measured flow is equal to the required flow rate setpoint.

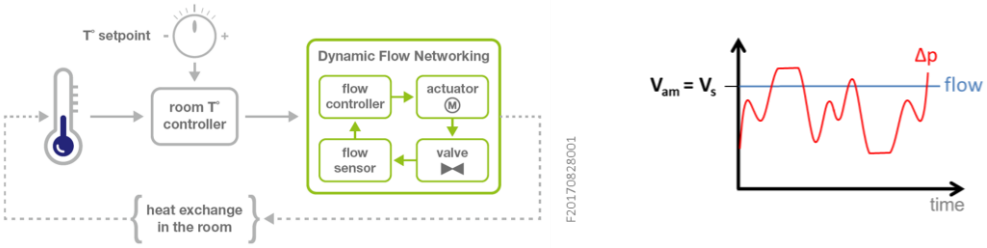


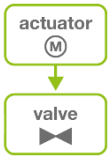


Thus DXMB_C will control the flow towards the desired setpoint, independent of potential pressure fluctuations in the system e.g. in case of part load. The control valve adapts automatically to the system parameters and searches for the ideal setpoint, to guarantee a maximum comfort for the user with minimal energy consumption.

Regardless of the operating mode, DXMB_C can be used for a variable or constant flow control or a maximum flow limit. The output signal $X_1$: 0..10Vdc, representing the actual measured flow, can be used for monitoring the actual flow.

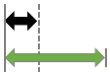

Thanks to this innovative technology, the *dynamx*™ valves can be used in a much larger flow range compared to traditional control valves.

Bluetooth®

DXMB_C has wireless Bluetooth® communication on board, which allows easy wireless access via a smartphone or tablet.

MP multiprotocol

The *dynamx*™ DXMB_C valves can be supplied with MP *MultiProtocol* communication allowing to integrate them into MODBUS as well as BACnet communication networks.

## 2. Technical data

| | | |
|---|---|---|
| ***Electrical*** | | |
| **Power supply $U_v$** | | AC 24 Volt (±10%), 50Hz<br>DC 24 Volt (±10%) |
| **Consumption** | *during control*<br>*stationary* | 3W (4VA)<br>1,5W (2VA) |
| **Input signal $Y_1$** | | 0..10Vdc (0.17mA) |
| **Feedback signal $X_1$** | | 0..10Vdc (≤ 2mA) the actual flow, scaled to the maximum flow settings for heating or cooling |
| **Electric wiring** | | 1m PVC cable, 4x 0,5mm² |
| **Wiring MODBUS/BACnet** | | 1m PVC cable, 1x2x 0,22mm² (STP) |
| ***Flow measurement*** | | |
| **Sensor type** | | ultrasonic TTM, no moving parts |
| **Flow sensor class** | | according to MID-2014/32/EU, EN1434-4:2007 |
| **Measuring unit** | | m³/h [1], l/s, l/min, gpm (UK), gpm (US) |
| ***Temperature measuring*** | | |
| **Sensor type** | | Pt500 or Pt1000 according to EN60751 |
| **Sensor pairing** | | according to MID-2014/32/EU, EN1434-4:2007 |
| ***Hydronics*** | | |
| **Construction** | *DXMB2_C*<br>*DXMB3_C* | 2-port<br>3-port, mixing |
| **Nominal pressure rating** | | PN16 (16 bar) |
| **Control characteristic** | | equal percentage [1] or linear |
| **Valve seat leakage** | | 0,001% of $K_{vs}$ value |
| **Differential pressure** | | no minimum differential pressure required |
| **Max. close-off pressure** | | 240kPa (200kPa for 3-port) |
| **Flow setpoint control** | | analog ($Y_1$), via bus communication, or via Bluetooth® communication and user APP |
| **Medium** | | water (glycol free) |
| **Medium quality** | | according to VDI 2035 |
| **Medium temperature** | | +2°C..+100°C |
| **Connections** | *inlet*<br>*outlet* | flat connection, female tail piece ISO7/1<br>female ISO7/1 (Rp) |
| **Start-up time** | | 3..5min after power-up |
| **Powerless position** | | last position |
| ***Material*** | | |
| **Housing** | | polypropylene, steel |
| **Wetted flow parts** | | brass CW602N [2], bronze, EPDM sealing, stainless steel (1.4122, 1.4401 and 1.4301), thermoplastics, ceramic materials |
| ***Environment*** | | |
| **Temperature** | *ambient*<br>*storage* | 0°C .. +45°C<br>-20°C .. +50°C |
| **IP protection** | | IP54 |
| **Humidity** | | maximum 90% HR, without condensation |
| **Mechanical environment** | | M1 (fixed installation with minimum vibrations) |
| **Maintenance / calibration** | | without maintenance, without calibration |

[1] default factory setting

[2] all sizes in DZR-brass (CW602N) except for DN15 size, which is in standard brass (CW617N)

## 3. MODBUS / BACnet interface

The *dynamx*™ DXMB_C valves are optionally available with an RS485 bus communication interface with the MP *MultiProtocol* functionality for easy integration[1] in any building management system (BMS).

Thanks to the *MultiProtocol* communication the DXMB_C flow-control valves can be integrated either in a:

- MODBUS, or
- BACnet network

These types of bus communication are very well adapted for communication on a field level. It is simple, while offering reliable and robust data communication. The MODBUS communication technology is open, license-free and is available for each BMS-system on the market.

| *Technical specifications* | | |
|---|---|---|
| **Protocol** | **MODBUS**<br>**BACnet** | RTU MS/TP, slave<br>MSTP, slave |
| **Physical layer** | | RS485, isolated<br>2-wire twisted pair |
| **Bus termination** | | 120Ω terminal resistor at each end of the bus |
| **Communication settings** [2] | | 9600, 19200 of **38400** [3] Baud<br>1 start bit<br>**even** [3] / odd / no parity<br>8 data bits<br>1 stop bit |
| **Topology** | | multi-drop bus, maximum length 1.000m |
| **Drop length** | | maximum 2m, preferably in daisy chain |
| **Bus cable type** | | shielded twisted pair STP or FTP |

[1] the installer is responsible for complying with local EMC regulations when installing, connecting and commissioning DXMB_C to a communication bus

[2] can be set via the Bluetooth® communication interface with the dxLink™ APP (when ordered) or via bus communication

[3] default factory settings

## 4. Electrical wiring

### DXMB_C. 1117_1

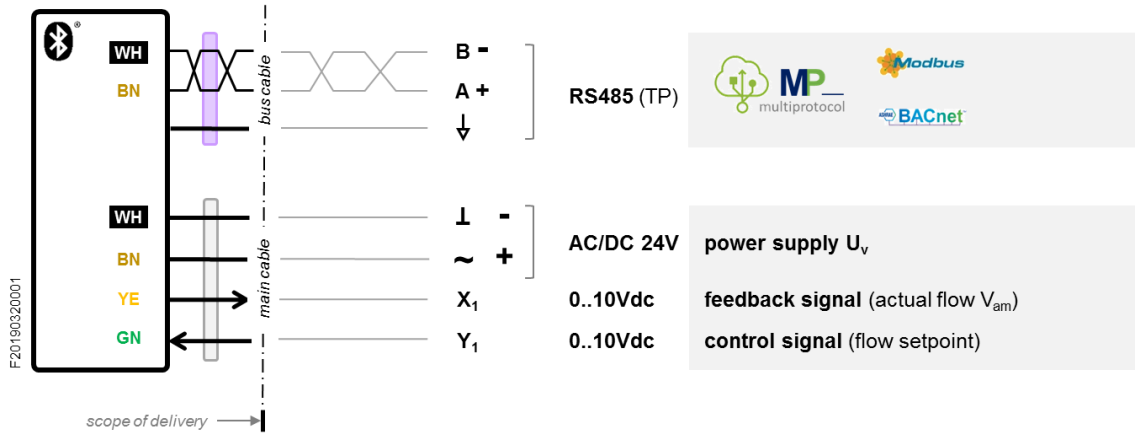


### DXMB_C. 1210_1

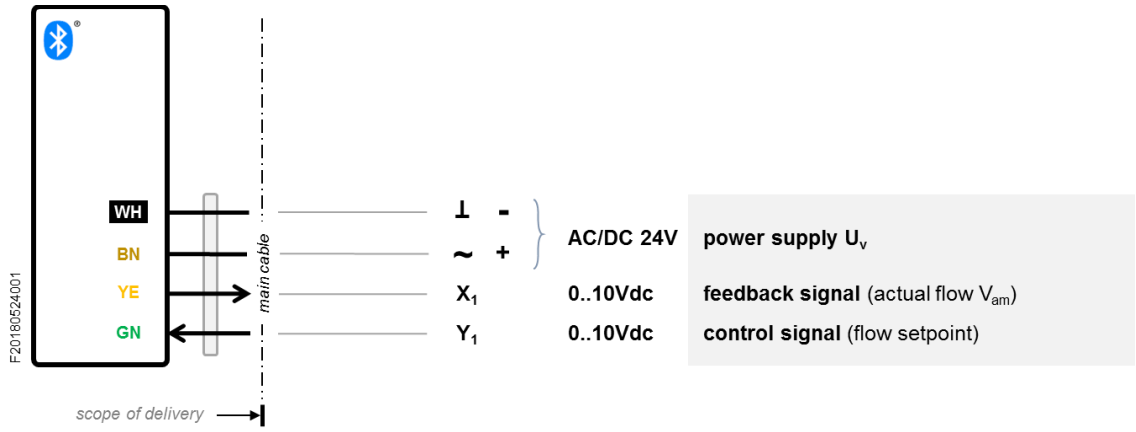


**Integrated Bluetooth® communication**

standard  optional

| WH | BK | BN | GN | YE | BU | PK | GY |
|---|---|---|---|---|---|---|---|
| white | black | brown | green | yellow | blue | pink | grey |
| wit | zwart | bruin | groen | geel | blauw | roos | grijs |
| blanc | noir | brun | vert | jaune | bleu | rose | gris |
| weiß | schwarz | braun | grün | gelb | blau | pink | grau |

*Individual wires are color coded, no numbering. Color coding according DIN 47100.*

A low voltage safety transformer should be used according to local regulations.

Complies with the Electromagnetic Compatibility Directive 2014/30/EU, applying standards:

- EN 61000-3-2 (2014)
- EN 61000-3-3 (2013)
- EN 61000-6-1 (2007)
- EN 61000-6-3 (2007) ( A1: 2011 / AC: 2012 )

## 5. Electrical consumption

| *Type* | DN [ mm ] | $\Delta p_s$ [ kPa ] | P [ W ] | Dim [ VA ] |
|---|---|---|---|---|
| **2-port versions** | | | | |
| DXMB2_D015C _ _ _ _ _ _ | 15 | 240 | 5 | 5 |
| DXMB2_D020C _ _ _ _ _ _ | 20 | 240 | 5 | 5 |
| DXMB2_D025C _ _ _ _ _ _ | 25 | 240 | 5 | 5 |
| DXMB2_D032C _ _ _ _ _ _ | 32 | 240 | 5 | 5 |
| DXMB2_D040C _ _ _ _ _ _ | 40 | 240 | 5 | 5 |
| DXMB2_D050C _ _ _ _ _ _ | 50 | 240 | 5 | 5 |
| **3-port versions** | | | | |
| DXMB3_D015C _ _ _ _ _ _ | 15 | 200 | 5 | 5 |
| DXMB3_D020C _ _ _ _ _ _ | 20 | 200 | 5 | 5 |
| DXMB3_D025C _ _ _ _ _ _ | 25 | 200 | 5 | 5 |
| DXMB3_D032C _ _ _ _ _ _ | 32 | 200 | 5 | 5 |
| DXMB3_D040C _ _ _ _ _ _ | 40 | 200 | 5 | 5 |
| DXMB3_D050C _ _ _ _ _ _ | 50 | 200 | 5 | 5 |

## 6. Flow range

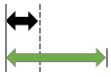

In order to achieve optimum sizing and to minimize pump consumption, *dynamx*™ flow-control valves are available with different flow rates.

| Type | DN | $K_{vs}$ | $V_{min}$ | $V_5$ | $V_{10}$ | $V_{20}$ | $V_{max}$ |
|---|---|---|---|---|---|---|---|
| | [ mm ] | [ $m^3$/h ] | [ l/h ] | [ l/h ] | [ l/h ] | [ l/h ] | [ l/h ] |
| DXMB_D015C. _ _ _ _ _ | 15 | 3,3 | 17 | 730 | 1.030 | 1.450 | 3.300 |
| DXMB_D020C. _ _ _ _ _ | 20 | 5,7 | 24 | 1.285 | 1.820 | 2.570 | 5.700 |
| DXMB_D025C. _ _ _ _ _ | 25 | 8,1 | 24 | 1.820 | 2.570 | 3.640 | 7.000 |
| DXMB_D032C. _ _ _ _ _ | 32 | 10,5 | 42 | 2.350 | 3.330 | 4.710 | 10.500 |
| DXMB_D040C. _ _ _ _ _ | 40 | 19,7 | 70 | 4.400 | 6.230 | 8.810 | 15.000 |
| DXMB_D050C. _ _ _ _ _ | 50 | 25,0 | 70 | 5.580 | 7.900 | 11.170 | 20.000 |

Legend

| | |
|---|---|
| DN | valve size |
| $K_{vs}$ | Kvs-value of the unit |
| $V_{min}$ | minimum controllable flow |
| $V_5$ | flow range at Δp 5kPa |
| $V_{10}$ | flow range at Δp 10kPa |
| $V_{20}$ | flow range at Δp 20kPa |
| $V_{max}$ | flow range ( 0..$V_{max}$ ) |

## 7. Hydraulic connection

### Flow direction

The DXMB_C flow-control valves have a fixed flow direction, as specified in the drawing. An arrow on the valve body indicates the in- and outputs of the flow control valve.

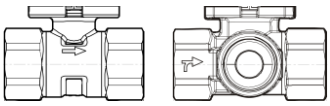

**DXMB2_C** **DXMB3_C**

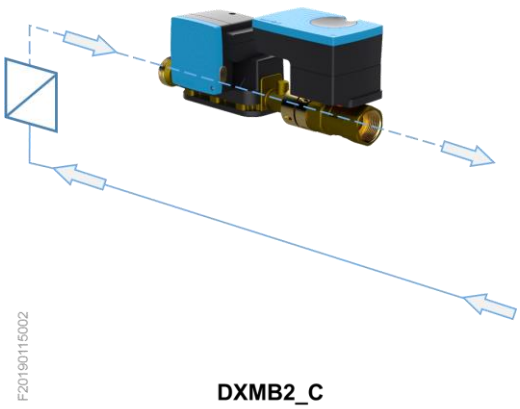


**DXMB2_C**

## 8. Temperature sensors


DXMB_C is available with two temperature sensors, for measuring the in- and outlet water temperature:

$$\Delta T = T°_{in} - T°_{out} = | T_{am1} - T_{am2} |$$

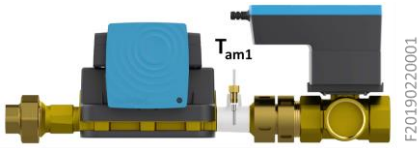


The temperature sensor $T_{am1}$ is mounted ex-works in the *dynamx*™ unit.

The second temperature sensor $T_{am2}$ is electrically connected to the DXMB_C unit ex works and is hydraulically mounted on site.

This temperature sensor $T_{am2}$ has a free cable length of min. 2m.

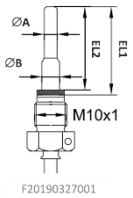


| | |
|---|---|
| $T_{am1}$ | direct sensor M10x1, pre-mounted ex-works |
| $T_{am2}$ | direct sensor M10x1, to be mounted on site (mounting not included) |

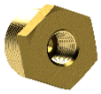

009056

In the standard scope of delivery of the DXMB_C, a nipple (1 pc) is provided for mounting the temperature sensor $T_2$. This nipple with R½ "external thread is provided with M10x1 female thread for the water temperature sensor $T_{am2}$.

Remark: other accessories for the mounting of temperature sensors are not part of the delivery and can be ordered separately.

In 3-port mixing applications, it is very important that the external temperature sensors are mounted in the right place.

As a rule of thumb the temperature sensors need to “see” the same flow as the flow sensor of the device.

The figure on the right shows how to mount the temperature sensors.

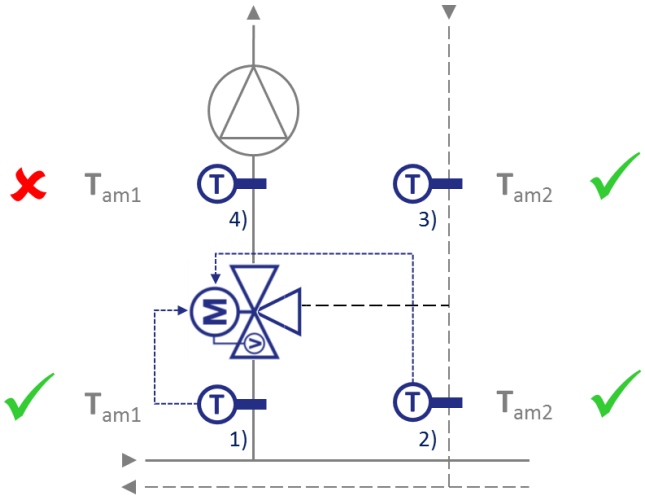

## 9. Status information (LED)

The two integrated LED's (optional) provide useful information during installation for easy commissioning:

+ 1x LED power supply
+ 1x LED status communication


## 10. Wireless commissioning

Thanks to the integrated Bluetooth® technology, the DXMB_C valves offer a wireless interface for commissioning purposes.

There is no easier way to get your hydronic systems installed and properly commissioned than with the dxLink™ APP.

All the information you need is right there, on your smartphone or tablet.

This feature can be combined with MODBUS or BACnet bus communication.

*Note: this feature may not available on all versions, please verify the ordering information*

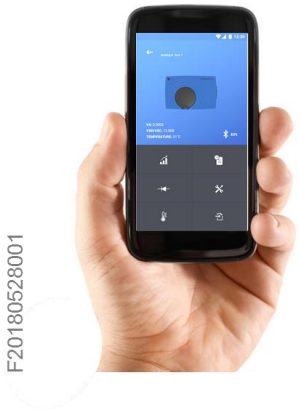


Available on the App Store
Google Play

## 11. Other resources

| | |
|---|---|
| B.101 - 01 | Mounting instructions |
| B.101 - 02 | User manual MODBUS RTU |
| B.101 - 03 | User manual BACnet MSTP |
| B.101 - 04 | Data files REVIT |

## 12. Intellectual property

DXMB_C is based on technology, protected by international patents:

- European patent Nr. 2307938
- European patent Nr. 2706425
- Chinese patent Nr. ZL200880130728.9
- United States Patent Nr. 9823666
- United States Patent No. 10394257
- Registered community design RCD N° 004030633-0001
- Registered community design RCD N° 004030633-0002

## 13. Dimensions (1/2)

**DXMB2_C '*ONE*'**

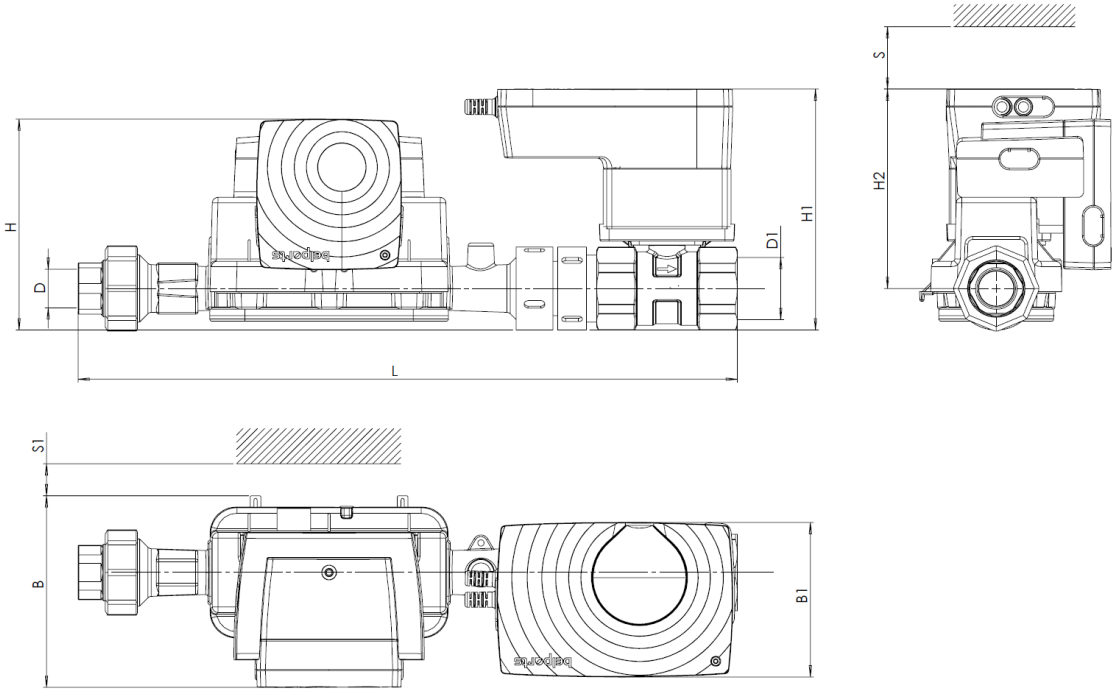


**DXMB3_C '*ONE*'**

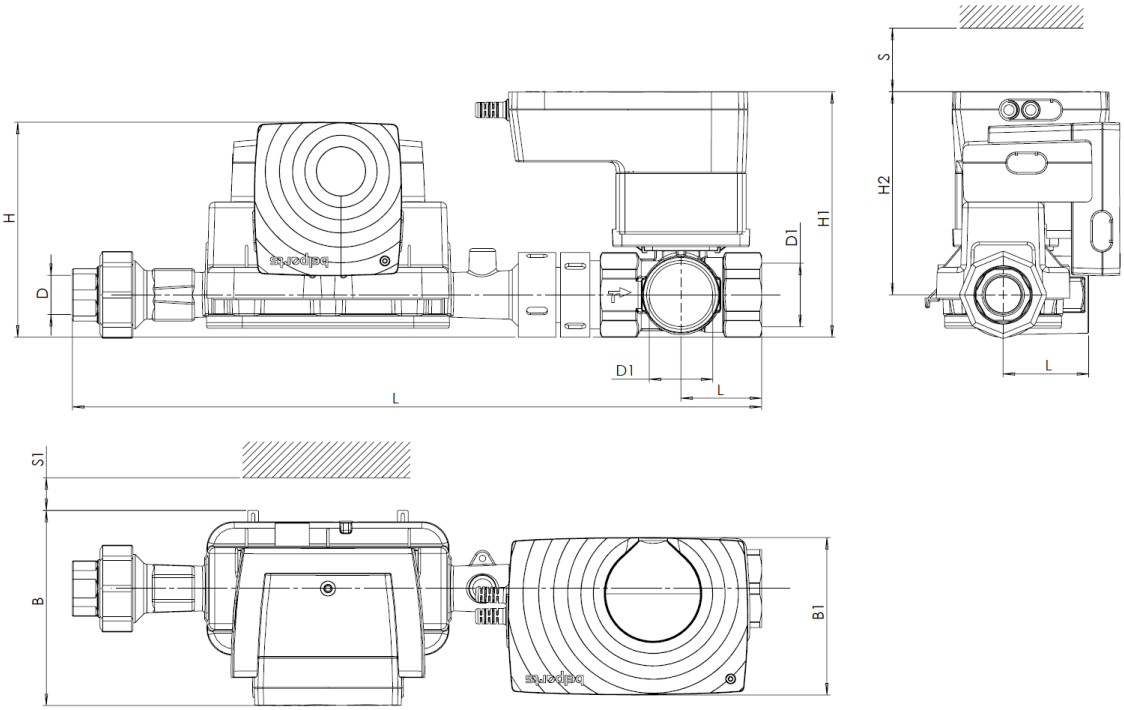

## 13. Dimensions

(2/2)

| DXMB-ONE W TP | Afmetingen | | | | | | | | | | | |
|---|---|---|---|---|---|---|---|---|---|---|---|---|
| | L | L1 | L2 | H | H1 | D/D1 | | H2 | S1 | B | B1 | S |
| DXMB2C015 | 304 | na | na | 108 | 168 | 1/2" | | 118 | Min 50 | 134 | 96 | Min 40 |
| DXMB3C015 | 309 | 33 | 34 | 108 | 168 | 1/2" | | 118 | Min 50 | 134 | 96 | Min 40 |
| DXMB2C020 | 383 | na | na | 130 | 143 | 3/4" | | 118 | Min 50 | 120 | 97 | Min 40 |
| DXMB3C020 | 387 | 36 | 37 | 130 | 143 | 3/4" | | 118 | Min 50 | 120 | 97 | Min 40 |
| DXMB2C025 | 410 | na | na | 129 | 145 | D1 | D | 121 | Min 50 | 120 | 97 | Min 40 |
| | | | | | | 1" | 3/4" | | | | | |
| DXMB3C025 | 419 | 43 | 45 | 129 | 145 | D1 | D | 121 | Min 50 | 120 | 97 | Min 40 |
| | | | | | | 1" | 3/4" | | | | | |
| DXMB2C032 | 431 | na | na | 132 | 151 | D1 | D | 125 | Min 50 | 120 | 97 | Min 40 |
| | | | | | | 1 1/4" | 3/4" | | | | | |
| DXMB3C032 | 442 | 50 | 53 | 132 | 151 | D1 | D | 125 | Min 50 | 120 | 97 | Min 40 |
| | | | | | | 1 1/4" | 3/4" | | | | | |
| DXMB2C040 | 498 | na | na | 144 | 168 | D1 | D | 130 | Min 50 | 120 | 97 | Min 40 |
| | | | | | | 1 1/2" | 1 1/4" | | | | | |
| DXMB3C040 | 502 | 55 | 57 | 144 | 168 | D1 | D | 130 | Min 50 | 120 | 97 | Min 40 |
| | | | | | | 1 1/2" | 1 1/4" | | | | | |
| DXMB2C050 | 513 | na | na | 143 | 181 | D1 | D | 143 | Min 50 | 120 | 101 | Min 40 |
| | | | | | | 2" | 1 1/4" | | | | | |
| DXMB3C050 | 529 | 66 | 69 | 144 | 181 | D1 | D | 143 | Min 50 | 120 | 104 | Min 40 |
| | | | | | | 2" | 1 1/4" | | | | | |

## 14. Item reference numbers

| DXMB | 2 | D | 025 | C | 1 | 1 | 1 | 7 | 2 | 1 | | |
|---|---|---|---|---|---|---|---|---|---|---|---|---|
| SERIES | | | | | VERSION | | | | | | | |
| | | | | | | | | | | | ***dynamx*™ Series flow-control valves** | |
| **DXMB** | | | | | | | | | | | **DXMB** | *dynamx*™ Modular |
| | | | | | | | | | | | **Number of ports** | |
| | **2** | | | | | | | | | | **2** | 2-port flow-control valve |
| | **3** | | | | | | | | | | **3** | 3-port flow-control valve (mixing) |
| | | | | | | | | | | | **Mounting** | |
| | | **D** | | | | | | | | | **D** | threaded, female ISO7/1 |
| | | | | | | | | | | | **Size (DN)** | |
| | | | **015** | | | | | | | | **015** | DN15 |
| | | | **020** | | | | | | | | **020** | DN20 |
| | | | **025** | | | | | | | | **025** | DN25 |
| | | | **032** | | | | | | | | **032** | DN32 |
| | | | **040** | | | | | | | | **040** | DN40 |
| | | | **050** | | | | | | | | **050** | DN50 |
| | | | | | | | | | | | **Function** | |
| | | | | **C** | | | | | | | **C** | standard flow-control functionality |
| | | | | | | | | | | | **Power supply** | |
| | | | | | **1** | | | | | | **1** | AC/DC 24 Volt with 2x LED |
| | | | | | | | | | | | **Version** | |
| | | | | | | **1** | | | | | **1** | standard version |
| | | | | | | | | | | | **User interface** | |
| | | | | | | | **0** | | | | **0** | - |
| | | | | | | | **1** | | | | **1** | with integrated Bluetooth® communication |
| | | | | | | | | | | | **Bus-communication** | |
| | | | | | | | | **0** | | | **0** | without bus-communication (standalone) |
| | | | | | | | | **7** | | | **7** | with *MultiProtocol* comm [1], RS485 isolated |
| | | | | | | | | | | | **ΔT measurement** | |
| | | | | | | | | | **0** | | **0** | without ΔT measurement |
| | | | | | | | | | **2** | | **2** | with ΔT measurement ( $T_{am1} + T_{am2}$ ) |
| | | | | | | | | | | | **Cable length** | |
| | | | | | | | | | | **1** | **1** | standard cable length (PVC) |

[1] *MultiProtocol* : MODBUS RTU and BACnet MSTP

## 15. Ordering information

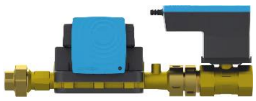

| Type | AC/DC 24 [ Volt ] | DN [ mm ] | $K_{vs}$ [ m³/h ] | $V_5$ [ l/h ] | $V_{10}$ [ l/h ] | $V_{max}$ [ l/h ] | $\Delta p_s$ [ kPa ] | 0..10Vdc | | | ΔT [ °C ] | $L_c$ [ m ] |
|---|---|---|---|---|---|---|---|---|---|---|---|---|
| **2-port version** | | | | | | | | | | | | |
| DXMB2D015C.111721 ▲ | ● | 15 | 3,3 | 730 | 1.030 | 3.300 | 240 | ● | ● | ● | ● | 1 |
| DXMB2D020C.111721 ▲ | ● | 20 | 5,7 | 1.285 | 1.820 | 5.700 | 240 | ● | ● | ● | ● | 1 |
| DXMB2D025C.111721 ▲ | ● | 25 | 8,1 | 1.820 | 2.570 | 7.000 | 240 | ● | ● | ● | ● | 1 |
| DXMB2D032C.111721 ▲ | ● | 32 | 10,5 | 2.350 | 3.330 | 10.500 | 240 | ● | ● | ● | ● | 1 |
| DXMB2D040C.111721 ▲ | ● | 40 | 19,7 | 4.400 | 6.230 | 15.000 | 240 | ● | ● | ● | ● | 1 |
| DXMB2D050C.111721 ▲ | ● | 50 | 25,0 | 5.580 | 7.900 | 20.000 | 240 | ● | ● | ● | ● | 1 |
| **3-port version, mixing** | | | | | | | | | | | | |
| DXMB3D015C.111721 ▲ | ● | 15 | 3,3 | 730 | 1.029 | 3.300 | 200 | ● | ● | ● | ● | 1 |
| DXMB3D020C.111721 ▲ | ● | 20 | 5,7 | 1.285 | 1.817 | 5.700 | 200 | ● | ● | ● | ● | 1 |
| DXMB3D025C.111721 ▲ | ● | 25 | 8,1 | 1.820 | 2.573 | 7.000 | 200 | ● | ● | ● | ● | 1 |
| DXMB3D032C.111721 ▲ | ● | 32 | 10,5 | 2.350 | 3.332 | 10.500 | 200 | ● | ● | ● | ● | 1 |
| DXMB3D040C.111721 ▲ | ● | 40 | 19,7 | 4.400 | 6.230 | 15.000 | 200 | ● | ● | ● | ● | 1 |
| DXMB3D050C.111721 ▲ | ● | 50 | 25,0 | 5.580 | 7.900 | 20.000 | 200 | ● | ● | ● | ● | 1 |

### OPTIONS

| Series | VERSION | | | | | | Description | |
|---|---|---|---|---|---|---|---|---|
| **DXMB_ C** | **1** | **1** | **1** | **0** | **2** | **1** | without bus-communication (standalone) | △ |
| | _ | _ | _ | _ | **0** | _ | without medium temperature sensors | △ |

Legend

| | | | | | |
|---|---|---|---|---|---|
| DN | valve size | $V_{max}$ | flow range ( 0..$V_{max}$ ) | $T_1$ | medium temperature sensor Nr.1 |
| $\Delta p_s$ | maximum close-off pressure | $V_{10}$ | flow range at Δp 10kPa | $T_2$ | medium temperature sensor Nr.2 |
| | Bluetooth® for wireless commissioning | | | $L_c$ | standard cable length (PVC) |

▲ standard
△ on request (min. quantities and/or longer lead times may apply, please contact us)