PRODUCT DATASHEET

# MOTORIZED 2- OR 3-WAY CONTROL VALVES TYPE CD..

**PN 6**

**flanged**

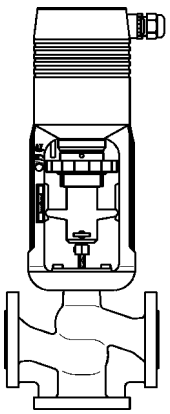

**CD3F50A-80U29**

## HIGHLIGHTS

- Suitable for the control of hot and chilled water (0...+130°C) in HVAC systems control of heating plants
- Suitable for water with antifreeze compounds down to -10°C (α)
- Tight shut-off in the closed position
- Microprocessor controlled
- Automatic self-calibration on start up

## DESCRIPTION

The motorized 2- or 3-way cast iron control valves, type CD, are suitable for the control of hot and chilled water (0...+130°C) in HVAC systems control of heating plants, with up to 50% max. antifreeze compounds like for example glycol.

The CD3F.. control valves are used as a mixing valve, and are made up of a valve and a motor set.

The selection of the motor set is depending on the valve size, power supply, control signal and differential pressure allowed.

(α) When used in applications with water (with antifreeze compounds) down to -10°C, an additional stem heater must be ordered separately ( T-HH-ZV13-.. ). Attention ! The stem heater cannot be used in combination with the 45.. type actuators.

| TECHNICAL SPECIFICATIONS | CD2F.. | CD3F.. |
|---|---|---|
| Form | Two-way | Three-way |
| Diameter nominal | DN 15 – DN 100 | DN 15 – DN 100 |
| Pressure rating | PN 6 | PN 6 |
| Flow characteristic | A→AB equal % | A→AB equal %<br>B→AB linear |
| Stroke | 14mm (DN 15 – DN 50)<br>20mm (DN 65)<br>30mm (DN 65 – DN 100) | 14mm (DN 15 – DN 50)<br>20mm (DN 65)<br>30mm (DN 65 – DN 100) |
| Rangeability | ≥ 40:1 | ≥ 40:1 |
| Function | two-way valve | mixing or on-off valve |
| Connection type | Flanges acc. EN 1092-2 type 21 | |
| Face to face dimension | Acc. EN 558-1 basic series 1 | |
| Leakage rate | EN 1349 – seat-leakage VI G 1 (tight sealing) | |
| Material | | |
| Body | Cast iron GG-25 (EN-JL1040) | |
| Plug | Brass CW614N | |
| Stem | CrNi-steel 1.4571 | |
| Stem sealing | O-rings EPDM | |

### Valve alternatives and accessories

- Plug made of CrNi-steel 1.4305
- Suitable for water with antifreeze compounds down to –10°C
  24 VAC, 50/60 Hz ( not available for the actuator series 45.. ! )
  DN 15 – DN 50 Power consumption: $P_{max.}$ ≈ 200 VA $P_N$ ≈ 45 VA
  DN 65 – DN 100 Power consumption: P ≈ 60 VA
- Epoxy resin special varnish as a corrosion resistant in case of condensed water, max. 80°C
- Usable for media based on mineral oil basis (stem sealing made of FKM)
- Technical silicon free version

Specialized periphery Integrator in HVAC

© Belparts NV
Wingepark 4
B-3110 Rotselaar
Tel : +32 (0)16 26 93 00
E-mail: info@belparts.be

© Belparts NV
Postbus 317
NL-3830 AJ Leusden
Tel : +31 (0)33 432 18 35
E-mail: info@belparts.nl

© Belparts France SARL
1, rue de la Haye - BP 12910
F-95731 Roissy CGD Cedex
Tel : +33 (0)1 49 19 22 93
E-mail: info@belparts.fr

Subject to changes without prior notice

PN 6

flanged

## PRODUCT KEY

The product identification key contains all essential data defining the unique features of the valve / actuator combination.

Example : type CD3F50A-80U29

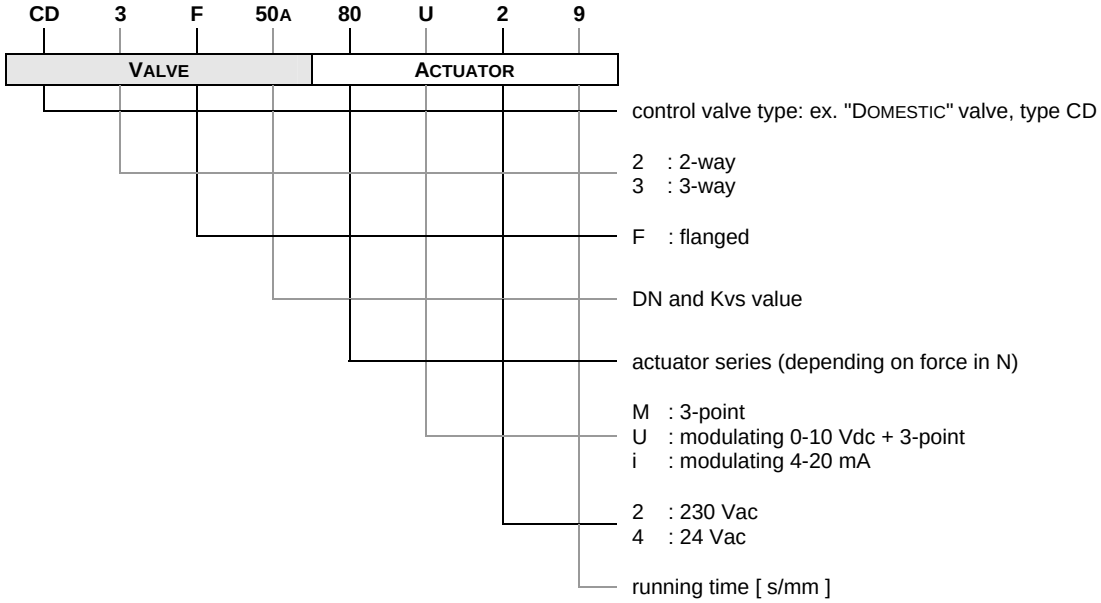


## VALVE CONSTRUCTION

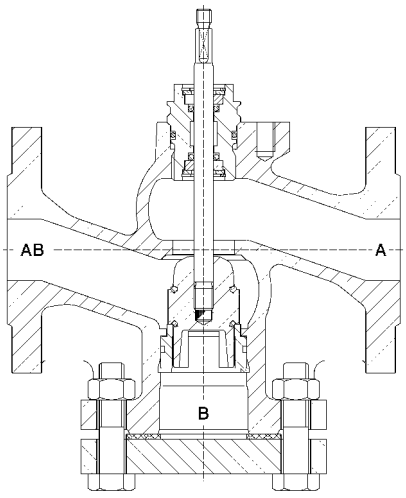


CD2F..

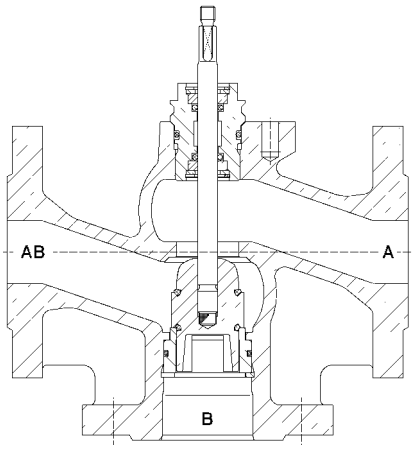


CD3F..

© Belparts NV
Wingepark 4
B-3110 Rotselaar
Tel : +32 (0)16 26 93 00
E-mail: info@belparts.be

© Belparts NV
Postbus 317
NL-3830 AJ Leusden
Tel : +31 (0)33 432 18 35
E-mail: info@belparts.nl

© Belparts France SARL
1, rue de la Haye - BP 12910
F-95731 Roissy CGD Cedex
Tel : +33 (0)1 49 19 22 93
E-mail: info@belparts.fr

Subject to changes without prior notice

PN 6

flanged

## VALVE ACTUATOR RANGE FOR CD.. CONTROL VALVES

| | ACTUATOR SERIES | | | | | |
|---|---|---|---|---|---|---|
| | 45.. | 60.. | 80.. | 160.. | 250.. | 500.. |
| | | 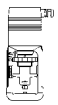 | | 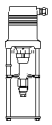 | | 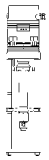 |
| FORCE [N] | 450 | 600 | 800 | 1600 | 2500 | 5000 |

Note • for the mounting of a 45.. type valve actuator on the CD.. valve body the mounting accessory T-HH-ZA74 must be ordered separately !

## TECHNICAL DATA MOTORIZED CD.. VALVES

| DN | | | 15 | 20 | 25 | 32 | 40 | 50 | 65 | | 80 | 100 |
|---|---|---|---|---|---|---|---|---|---|---|---|---|
| kvs-value m³/h | | A | 4 | 6.3 | 10 | 16 | 25 | 40 | 63 | | 100 | 160 |
| | | B | 2.5 | 5 | 8 | 12.5 | 20 | 31.5 | 50 | | 80 | 125 |
| | | C | 1.6 | | | | | | | | | |
| | | D | 1.25 | | | | | | | | | |
| | | E | 0.63 | | | | | | | | | |
| Stroke | | mm | 14 | | | | | | 20 | 30 | 30 | |
| 45M45<br>45M25<br>45U45<br>45i45 | Actuating time [1] | s | 125 | | | | | | | | | |
| | | | 70* | | | | | | | | | |
| | Closing pressure | kPa | 600 | 600 | 550 | 300 | 150 | 100 | | | | |
| 60U49<br>60U29<br>60i49<br>60i29 | Actuating time [1] | s | 170 | | | | | | | | | |
| | | | 125* | | | | | | | | | |
| | | | 55 | | | | | | | | | |
| | | | 27 | | | | | | | | | |
| | Closing pressure | kPa | 600 | 600 | 600 | 400 | 250 | 150 | | | | |
| 80U49<br>80U29<br>80i49<br>80i29 | Actuating time [1] | s | 170 | | | | | | 240 | | | |
| | | | 125* | | | | | | 180* | | | |
| | | | 55 | | | | | | 80 | | | |
| | | | 27 | | | | | | 38 | | | |
| | Closing pressure | kPa | 600 | 600 | 600 | 600 | 400 | 200 | 100 | | | |
| 160U44<br>160U24<br>160i44<br>160i24 | Actuating time [1] | s | | | | | 95 | | | 180 | | |
| | | | | | | | 55* | | | 120* | | |
| | Closing pressure | kPa | | | | | 600 | 600 | | 350 | 230 | 140 |
| 250U42<br>250i42<br>250U22<br>250i22 | Actuating time [1] | s | | | | | | | | 150 | | |
| | | | | | | | | | | 75* | | |
| | Closing pressure | kPa | | | | | | | | 550 | 350 | 250 |
| 500U42<br>500i42<br>500U22<br>500i22 | Actuating time [1] | s | | | | | | | | 150 | | |
| | | | | | | | | | | 75* | | |
| | Closing pressure | kPa | | | | | | | | 600 | 600 | 500 |

100 kPa = 1 bar = 10 mWS

[1] Actuating time freely adjustable, factory presetting is marked with *

© Belparts NV
Wingepark 4
B-3110 Rotselaar
Tel : +32 (0)16 26 93 00
E-mail: info@belparts.be

© Belparts NV
Postbus 317
NL-3830 AJ Leusden
Tel : +31 (0)33 432 18 35
E-mail: info@belparts.nl

© Belparts France SARL
1, rue de la Haye - BP 12910
F-95731 Roissy CGD Cedex
Tel : +33 (0)1 49 19 22 93
E-mail: info@belparts.fr

Subject to changes without prior notice



Specialized periphery Integrator in HVAC

Specialized periphery integrator in HVAC

PN 6

flanged

## TECHNICAL DATA VALVE ACTUATOR SERIES 45..

| ACTUATOR TYPE | | 45M45 | 45M25 | 45U45 | 45i45 |
|---|---|---|---|---|---|
| Actuating time at 50 Hz [1] | s/mm | 9 · 5* | 9 · 5* | 9 · 5* | 9 · 5* |
| Actuating thrust | kN | 0.45 | 0.45 | 0.45 | 0.45 |
| Stroke | mm | max. 15 | max. 15 | max. 15 | max. 15 |
| Power supply | VAC | 24 ±10% | 230 +6% -10% | 24 ±10% | 24 ±10% |
| Frequency | Hz | 50/60 ±5% | 50/60 ±5% | 50/60 ±5% | 50/60 ±5% |
| Power consumption | VA | 3 | 7 | 3 | 3 |
| Input signal [2] | | 3-point | 3-point | 0(2)...10 VDC<br>70 kOhm | 0(4)...20 mA<br>0.5 kOhm |
| Output signal [2] | | 0...10 VDC<br>max. 8 mA<br>min. 1200 Ohm | 0...10 VDC<br>max. 8 mA<br>min. 1200 Ohm | 0...10 VDC<br>max. 8 mA min.<br>1200 Ohm | 0...10 VDC<br>max. 8 mA min.<br>1200 Ohm |
| Hysteresis | V | 0.3 | 0.3 | 0.3 | 0.3 |

[1] Actuating time freely adjustable, presetting is marked with *
[2] Invertible input and output signal

| | | |
|---|---|---|
| Enclosure protection: | IP 54 in automatic operation<br>IP 30 in manual operation | |
| Resolution: | **45U45 and 45i45** | |
| | electric | ≤ 0.04 VDC |
| | mechanical | ≤ 0.06 mm |
| Mains connection: | 24 VAC<br>230 VAC | 1.5 m flexible cable, 0.5mm$^2$, with wire end ferrule actuator with terminal connections |
| Operating mode: | S3-50% ED c/h 1200 | EN 60034-1 |
| End position switch-off: | load-dependent | |
| Ambient temperature: | 0...+50°C | |
| Weight: | 0.75 kg | |

**Actuator alternatives and accessories**

- Voltage: 24 VDC [1] or 115 VAC

[1] Please state when ordering, which kind of direct-current
1. smooth direct current or
2. rectified alternating voltage

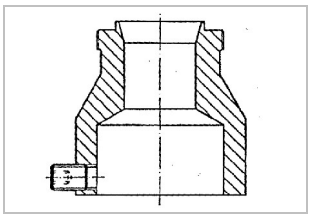

**Note**

For the mounting of a standard 45.. type valve actuator on the CD.. valve body the mounting accessory T-HH-ZA74 is required.
This accessory is included when ordering a complete assembly : valve + actuator.

However when ordering the actuator separately, in addition 1 pc. **T-HH-ZA74** must be ordered separately !

Specialized periphery Integrator in HVAC

PN 6

flanged

## TECHNICAL DATA VALVE ACTUATOR SERIES 60..

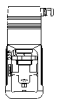

| ACTUATOR TYPE | | 60U49 | 60U29 | 60i49 | 60i29 |
|---|---|---|---|---|---|
| Actuating time at 50 Hz [1] | s/mm | 12 · 9* · 4 · 1.9 | 12 · 9* · 4 · 1.9 | 12 · 9* · 4 · 1.9 | 12 · 9* · 4 · 1.9 |
| Actuating thrust | kN | 0.6 | 0.6 | 0.6 | 0.6 |
| Stroke | mm | max. 20 | max. 20 | max. 20 | max. 20 |
| Power supply | VAC | 24 ±10% | 230 +6% -10% | 24 ±10% | 230 +6% -10% |
| Power supply[4] | VDC | 24 ±10% | - | 24 ±10% | - |
| Frequency | Hz | 50/60 ±5% | 50/60 ±5% | 50/60 ±5% | 50/60 ±5% |
| Power consumption | VA | 6 | 12 | 6 | 12 |
| Input signal [2] | | • 3-point, or<br>• 0(2)…10 VDC (77 kOhm) | | 0(4)…20 mA (0.5 kOhm) | |
| Output signal [2] | | 0...10 VDC<br>max. 8 mA<br>min.1200 Ohm | 0...10 VDC<br>max. 8 mA<br>min.1200 Ohm | 0...10 VDC<br>max. 8 mA<br>min.1200 Ohm | 0...10 VDC<br>max. 8 mA<br>min.1200 Ohm |
| Hysteresis [3] | V | 0.15* · 0.5 | 0.15* · 0.5 | 0.15* · 0.5 | 0.15* · 0.5 |

| | | |
|---|---|---|
| Enclosure protection: | IP 54 | |
| Characteristic [3]: | linear or exponential | |
| Resolution: | electric<br>mechanical | ≤ 0.04 VDC<br>≤ 0.095 mm |
| Operating mode: | S3-50% ED c/h 1200 | EN 60034-1 |
| End position switch-off: | load-dependent | |
| Ambient temperature: | 0...+50°C | |
| Weight: | 1.9 kg | |

[1] Actuating time freely adjustable, presetting is marked with *
[2] Invertible input and output signal
[3] Freely adjustable
[4] Please state when ordering, which kind of direct-current
1. smooth direct current or
2. rectified alternating voltage

**Actuator alternatives and accessories**

- Voltage: 115 VAC
- Position switch unit [1]: 2 switches, potential free, infinitely adjustable
  Rated load: 8 A / 250 VAC
  8 A / 30 VDC
  Turn-on voltage: max. 400 VAC
  max. 125 VDC
- Enclosure protection: IP 65
- Output signal [1]: X=0(4)...20 mA
- EEx protected actuator available on request

[1] Position switch unit and output signal not in combination

Specialized periphery Integrator in HVAC

Specialized periphery integrator in HVAC

PN 6

flanged

## TECHNICAL DATA VALVE ACTUATOR SERIES 80..

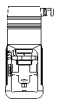

| ACTUATOR TYPE | | 80U49 | 80U29 | 80i49 | 80i29 |
|---|---|---|---|---|---|
| Actuating time at 50 Hz [1] | s/mm | 12 · 9* · 4 · 1.9 | 12 · 9* · 4 · 1.9 | 12 · 9* · 4 · 1.9 | 12 · 9* · 4 · 1.9 |
| Actuating thrust | kN | 0,8 | 0,8 | 0,8 | 0,8 |
| Stroke | mm | max. 20 | max. 20 | max. 20 | max. 20 |
| Power supply | VAC | 24 ±10% | 230 +6% -10% | 24 ±10% | 230 +6% -10% |
| Power supply[4] | VDC | 24 ±10% | - | 24 ±10% | - |
| Frequency | Hz | 50/60 ±5% | 50/60 ±5% | 50/60 ±5% | 50/60 ±5% |
| Power consumption | VA | 6 | 12 | 6 | 12 |
| Input signal [2] | | • 3-point, or<br>• 0(2)…10 VDC (77 kOhm) | | 0(4)…20 mA (0.5 kOhm) | |
| Output signal [2] | | 0...10 VDC<br>max. 8 mA<br>min.1200 Ohm | 0...10 VDC<br>max. 8 mA<br>min.1200 Ohm | 0...10 VDC<br>max. 8 mA<br>min.1200 Ohm | 0...10 VDC<br>max. 8 mA<br>min.1200 Ohm |
| Hysteresis [3] | V | 0.15* · 0.5 | 0.15* · 0.5 | 0.15* · 0.5 | 0.15* · 0.5 |

| | | |
|---|---|---|
| Enclosure protection: | IP 54 | |
| Characteristic [3]: | linear or exponential | |
| Resolution: | electric<br>mechanical | ≤ 0.04 VDC<br>≤ 0.095 mm |
| Operating mode: | S3-50% ED c/h 1200 | EN 60034-1 |
| End position switch-off: | load-dependent | |
| Ambient temperature: | 0...+50°C | |
| Weight: | 1.9 kg | |

[1] Actuating time freely adjustable, presetting is marked with *
[2] Invertible input and output signal
[3] Freely adjustable
[4] Please state when ordering, which kind of direct-current
1. smooth direct current or
2. rectified alternating voltage

**Actuator alternatives and accessories**

- Voltage: 115 VAC
- Position switch unit [1]: 2 switches, potential free, infinitely adjustable
  Rated load: 8 A / 250 VAC
  8 A / 30 VDC
  Turn-on voltage: max. 400 VAC
  max. 125 VDC
- Enclosure protection: IP 65
- Output signal [1]: X=0(4)...20 mA
- EEx protected actuator available on request

[1] Position switch unit and output signal not in combination

Specialized periphery Integrator in HVAC

© Belparts NV
Wingepark 4
B-3110 Rotselaar
Tel : +32 (0)16 26 93 00
E-mail: info@belparts.be

© Belparts NV
Postbus 317
NL-3830 AJ Leusden
Tel : +31 (0)33 432 18 35
E-mail: info@belparts.nl

© Belparts France SARL
1, rue de la Haye - BP 12910
F-95731 Roissy CGD Cedex
Tel : +33 (0)1 49 19 22 93
E-mail: info@belparts.fr

Specialized periphery integrator in HVAC

**PN 6**

**flanged**

## TECHNICAL DATA VALVE ACTUATOR SERIES 160..

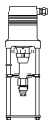

| ACTUATOR TYPE | | 160U44 | 160U24 | 160i44 | 160i24 |
|---|---|---|---|---|---|
| Actuating time at 50 Hz [1] | s/mm | 6 · 4* | 6 · 4* | 6 · 4* | 6 · 4* |
| Actuating thrust | kN | 1.6 | 1.6 | 1.6 | 1.6 |
| Stroke | mm | max. 30 | max. 30 | max. 30 | max. 30 |
| Power supply | VAC | 24 ±10% | 230 +6% -10% | 24 ±10% | 230 +6% -10% |
| Power supply[4] | VDC | 24 ±10% | - | 24 ±10% | - |
| Frequency | Hz | 50/60 ±5% | 50/60 ±5% | 50/60 ±5% | 50/60 ±5% |
| Power consumption | VA | 6 | 12 | 6 | 12 |
| Input signal [2] | | • 3-point, or<br>• 0(2)…10 VDC (77 kOhm) | | 0(4)…20 mA (0.5 kOhm) | |
| Output signal [2] | | 0...10 VDC<br>max. 8 mA<br>min.1200 Ohm | 0...10 VDC<br>max. 8 mA<br>min.1200 Ohm | 0...10 VDC<br>max. 8 mA<br>min.1200 Ohm | 0...10 VDC<br>max. 8 mA<br>min.1200 Ohm |
| Hysteresis [3] | V | 0.15* · 0.5 | 0.15* · 0.5 | 0.15* · 0.5 | 0.15* · 0.5 |

| | | |
|---|---|---|
| Enclosure protection: | IP 54 | |
| Resolution: | electric | ≤ 0.04 VDC |
| | mechanical | ≤ 0.05 mm |
| Operating mode: | S3-50% ED c/h 1200 | EN 60034-1 |
| End position switch-off: | load-dependent | |
| Ambient temperature: | 0…+50°C | |
| Weight: | 3.2 kg | |

**Actuator alternatives and accessories**

- Voltage: 115 VAC
- Position switch unit [5]: 2 switches, potential free, infinitely adjustable
  - Rated load: 8 A / 250 VAC, 8 A / 30 VDC
  - Turn-on voltage: max. 400 VAC, max. 125 VDC
- Enclosure protection: IP 65
- Output signal [5]: X=0(4)...20 mA
- Distance pillars, traverse and all screws located on exterior made of stainless steel
- EEx protected actuator available on request

[1] Actuating time freely adjustable, presetting is marked with *
[2] Invertible input and output signal
[3] Freely adjustable
[4] Please state when ordering, which kind of direct-current
1. smooth direct current or
2. rectified alternating voltage
[5] Position switch unit and output signal not in combination

Specialized periphery Integrator in HVAC

© Belparts NV
Wingepark 4
B-3110 Rotselaar
Tel : +32 (0)16 26 93 00
E-mail: info@belparts.be

© Belparts NV
Postbus 317
NL-3830 AJ Leusden
Tel : +31 (0)33 432 18 35
E-mail: info@belparts.nl

© Belparts France SARL
1, rue de la Haye - BP 12910
F-95731 Roissy CGD Cedex
Tel : +33 (0)1 49 19 22 93
E-mail: info@belparts.fr

Subject to changes without prior notice

PN 6

flanged

## TECHNICAL DATA VALVE ACTUATOR SERIES 250..

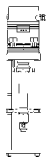

| ACTUATOR TYPE | | 250U42 | 250U22 | 250i42 | 250i22 |
|---|---|---|---|---|---|
| Actuating time [1] | s/mm | 5 · 2.5* | 5 · 2.5* | 5 · 2.5* | 5 · 2.5* |
| Actuating thrust | kN | 2.5 | 2.5 | 2.5 | 2.5 |
| Stroke | mm | max. 60 | max. 60 | max. 60 | max. 60 |
| Power supply | VAC | 24 ±10% | 230 +6% -10% | 24 ±10% | 230 +6% -10% |
| Power supply [2] | VDC | 24 ±10% | - | 24 ±10% | - |
| Frequency | Hz | 50/60 ±5% | 50/60 ±5% | 50/60 ±5% | 50/60 ±5% |
| Power consumption | VA | max. 40 | max. 50 | max. 40 | max. 50 |
| Input signal [3] | | • 3-point, or<br>• 0(2)…10 VDC (77 kOhm) | | 0(4)…20 mA (0.5 kOhm) | |
| Output signal [3] | | 0...10 VDC<br>max. 8 Ma<br>min. 1200 Ohm | 0...10 VDC<br>max. 8 mA<br>min. 1200 Ohm | 0...10 VDC<br>max. 8 mA<br>min. 1200 Ohm | 0...10 VDC<br>max. 8 mA<br>min. 1200 Ohm |
| Hysteresis [4] | V | 0.05 · 0.15* · 0.3 · 0.5 | 0.05 · 0.15* · 0.3 · 0.5 | 0.05 · 0.15* · 0.3 · 0.5 | 0.05 · 0.15* · 0.3 · 0.5 |

| | | |
|---|---|---|
| Enclosure protection: | IP 54 | |
| Resolution: | electric<br>mechanical | ≤ 0.04 VDC<br>≤ 0.04 mm |
| Operating mode: | S3-50% ED c/h 1200 | EN 60034-1 |
| End position switch-off: | load-dependent | |
| Ambient temperature: | 0...+50°C | |
| Weight: | 250.. (24V)<br>250.. (230V) | 7.0 kg<br>8.2 kg |

**Actuator variant and accessories**

- Voltage: 115 VAC
- Position switch unit: 2 switches (WE1/WE2), potential free, infinitely adjustable
  Rated load: 8 A / 250 VAC
  8 A / 30 VDC
  Turn-on voltage: max. 400 VAC
  max. 125 VDC
- Enclosure protection: IP 65
- Output signal: X=0(4)...20 mA
- Distance pillars, traverse and all screws located on exterior made of stainless steel

[1] Actuating time freely adjustable, presetting is marked with *
[2] Please state when ordering, which kind of direct-current
1. smooth direct current or
2. rectified alternating voltage
[3] Invertible input and output signal
[4] Freely adjustable

Specialized periphery Integrator in HVAC

Specialized periphery integrator in HVAC

PN 6

flanged

## TECHNICAL DATA VALVE ACTUATOR SERIES 500..

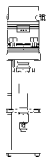

| ACTUATOR TYPE | | 500U42 | 500U22 | 500i42 | 500i22 |
|---|---|---|---|---|---|
| Actuating time [1] | s/mm | 5 · 2.5* | 5 · 2.5* | 5 · 2.5* | 5 · 2.5* |
| Actuating thrust | kN | 5.0 | 5.0 | 5.0 | 5.0 |
| Stroke | mm | max. 60 | max. 60 | max. 60 | max. 60 |
| Power supply | VAC | 24 ±10% | 230 +6% -10% | 24 ±10% | 230 +6% -10% |
| Power supply [2] | VDC | 24 ±10% | - | 24 ±10% | - |
| Frequency | Hz | 50/60 ±5% | 50/60 ±5% | 50/60 ±5% | 50/60 ±5% |
| Power consumption | VA | max. 40 | max. 50 | max. 40 | max. 50 |
| Input signal [3] | | • 3-point, or<br>• 0(2)…10 VDC (77 kOhm) | | 0(4)…20 mA (0.5 kOhm) | |
| Output signal [3] | | 0...10 VDC<br>max. 8 Ma<br>min. 1200 Ohm | 0...10 VDC<br>max. 8 mA<br>min. 1200 Ohm | 0...10 VDC<br>max. 8 mA<br>min. 1200 Ohm | 0...10 VDC<br>max. 8 mA<br>min. 1200 Ohm |
| Hysteresis [4] | V | 0.05 · 0.15* · 0.3 · 0.5 | 0.05 · 0.15* · 0.3 · 0.5 | 0.05 · 0.15* · 0.3 · 0.5 | 0.05 · 0.15* · 0.3 · 0.5 |

| | | |
|---|---|---|
| Enclosure protection: | IP 54 | |
| Resolution: | electric<br>mechanical | ≤ 0.04 VDC<br>≤ 0.04 mm |
| Operating mode: | S3-50% ED c/h 1200 | EN 60034-1 |
| End position switch-off: | load-dependent | |
| Ambient temperature: | 0...+50°C | |
| Weight: | 500.. (24V)<br>500.. (230V) | 7.0 kg<br>8.2 kg |

**Actuator variant and accessories**

- Voltage: 115 VAC
- Position switch unit: 2 switches (WE1/WE2), potential free, infinitely adjustable
  Rated load: 8 A / 250 VAC
  8 A / 30 VDC
  Turn-on voltage: max. 400 VAC
  max. 125 VDC
- Enclosure protection: IP 65
- Output signal: X=0(4)...20 mA
- Distance pillars, traverse and all screws located on exterior made of stainless steel

[1] Actuating time freely adjustable, presetting is marked with *
[2] Please state when ordering, which kind of direct-current
1. smooth direct current or
2. rectified alternating voltage
[3] Invertible input and output signal
[4] Freely adjustable

Specialized periphery Integrator in HVAC

© Belparts NV
Wingepark 4
B-3110 Rotselaar
Tel : +32 (0)16 26 93 00
E-mail: info@belparts.be

© Belparts NV
Postbus 317
NL-3830 AJ Leusden
Tel : +31 (0)33 432 18 35
E-mail: info@belparts.nl

© Belparts France SARL
1, rue de la Haye - BP 12910
F-95731 Roissy CGD Cedex
Tel : +33 (0)1 49 19 22 93
E-mail: info@belparts.fr

Subject to changes without prior notice

PN 6

flanged

## ELECTRICAL WIRING

### MODULATING 0-10VDC

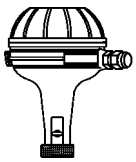

45U45

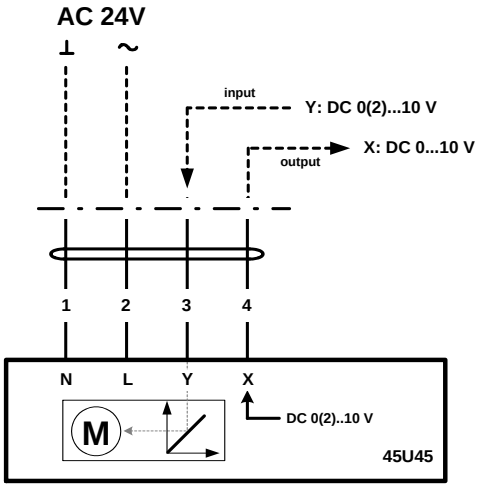


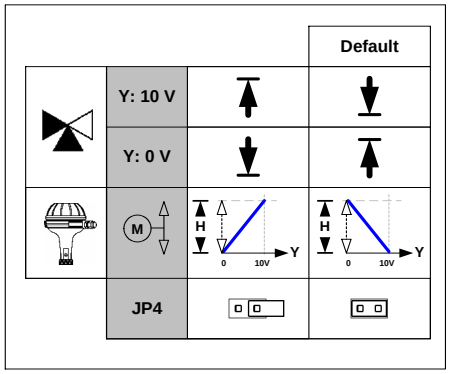


⊥ 1 = N = Blauw - Bleu - Blau - Blue
~ 2 = L = Bruin - Brun - Braun - Brown
3 = Y = Zwart - Noir - Schwarz - Black
4 = X = Rood - Rouge - Rot - Red

### MODULATING 4-20 MA

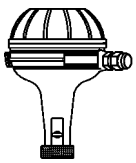

45i45

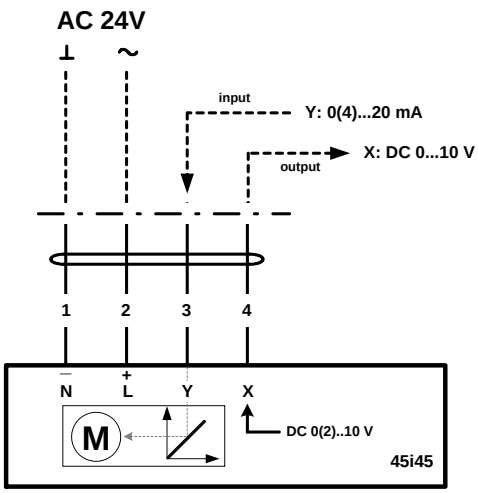


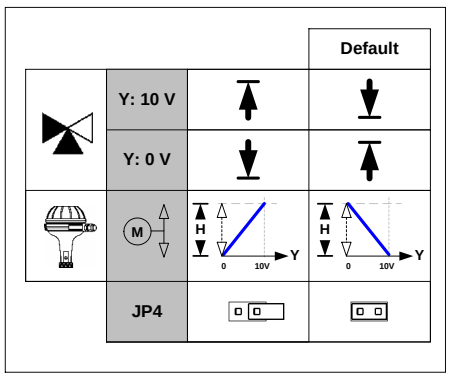


⊥ 1 = N = Blauw - Bleu - Blau - Blue
~ 2 = L = Bruin - Brun - Braun - Brown
3 = Y = Zwart - Noir - Schwarz - Black
4 = X = Rood - Rouge - Rot - Red

Specialized periphery Integrator in HVAC

© Belparts NV
Wingepark 4
B-3110 Rotselaar
Tel : +32 (0)16 26 93 00
E-mail: info@belparts.be

© Belparts NV
Postbus 317
NL-3830 AJ Leusden
Tel : +31 (0)33 432 18 35
E-mail: info@belparts.nl

© Belparts France SARL
1, rue de la Haye - BP 12910
F-95731 Roissy CGD Cedex
Tel : +33 (0)1 49 19 22 93
E-mail: info@belparts.fr

Subject to changes without prior notice

## ELECTRICAL WIRING

### 3 POINT CONTROL 24 VAC

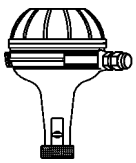

45M45

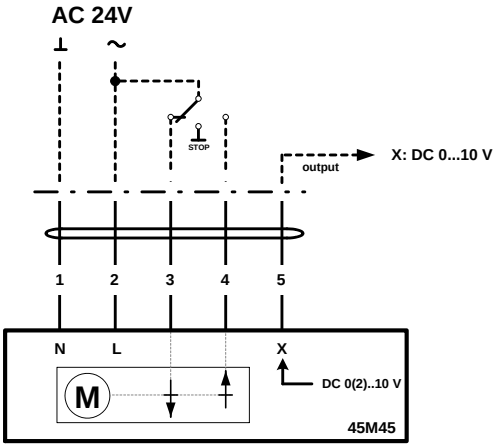


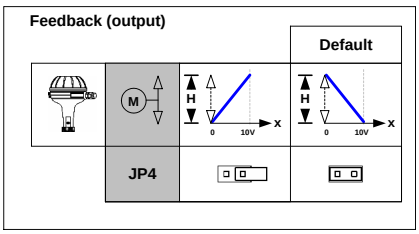


| | | | |
|---|---|---|---|
| ⊥ | 1 | N | Blauw - Bleu - Blau - Blue |
| ~ | 2 | L | Bruin - Brun - Braun - Brown |
| | 3 | | Zwart - Noir - Schwarz - Black |
| | 4 | | Wit - Blanc - Weiss - White |
| | 5 | X | Rood - Rouge - Rot - Red |

### 3 POINT CONTROL 230 VAC

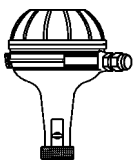

45M25

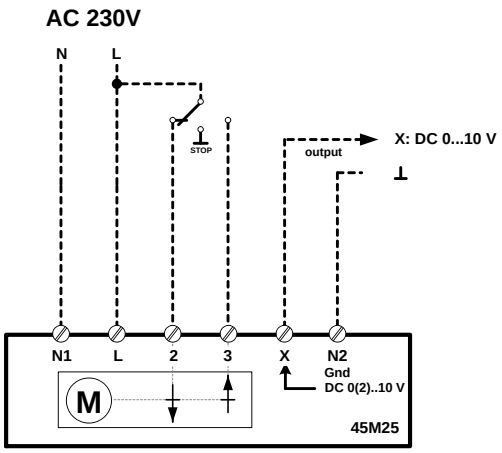


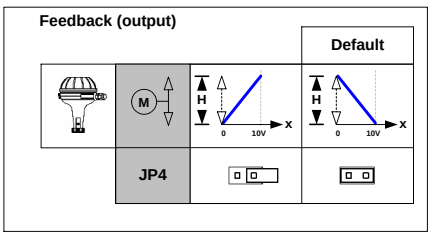


Specialized periphery Integrator in HVAC

## ELECTRICAL WIRING

### AC 24 VOLT MODULATING CONTROL SIGNAL 0-10VDC

60U49 / 80U49

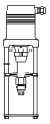

160U44

250U42 / 500U42

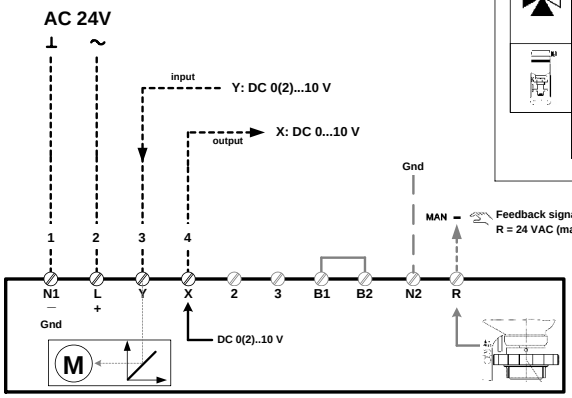


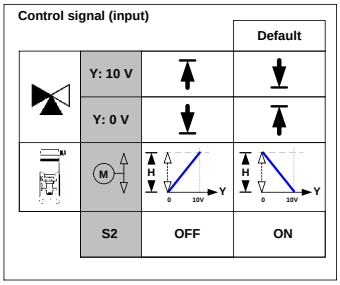


B1/B2 connection of a binary signal (DI)

### AC 24 VOLT MODULATING CONTROL SIGNAL 4-20MA

60i49 / 80i49

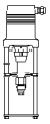

160i44

250i42 / 500i42

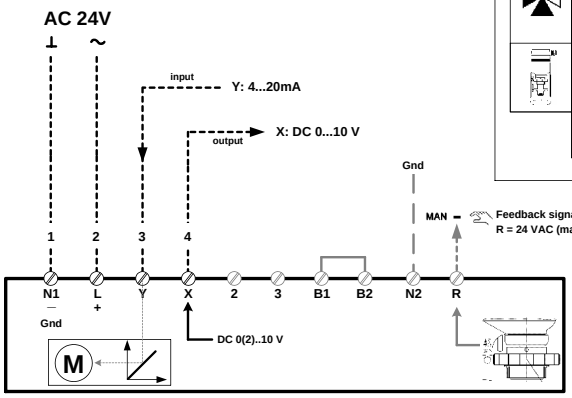


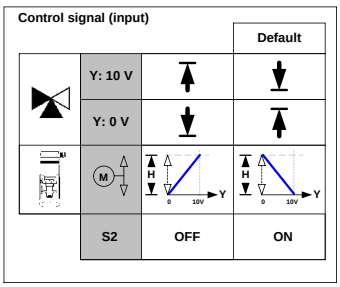


B1/B2 connection of a binary signal (DI)

N2 is the zero potential for the „X“, „Y“ and „R“ signals.

- 24 VAC(DC) : it is recommended to connect N2 in case of actuators in 24 VAC(DC) design.



© Belparts NV
Wingepark 4
B-3110 Rotselaar
Tel : +32 (0)16 26 93 00
E-mail: info@belparts.be

© Belparts NV
Postbus 317
NL-3830 AJ Leusden
Tel : +31 (0)33 432 18 35
E-mail: info@belparts.nl

© Belparts France SARL
1, rue de la Haye - BP 12910
F-95731 Roissy CGD Cedex
Tel : +33 (0)1 49 19 22 93
E-mail: info@belparts.fr

Subject to changes without prior notice

## ELECTRICAL WIRING

### AC 24 VOLT 3-POINT CONTROL SIGNAL

60U49 / 80U49

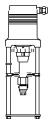

160U44

250U42 / 500U42

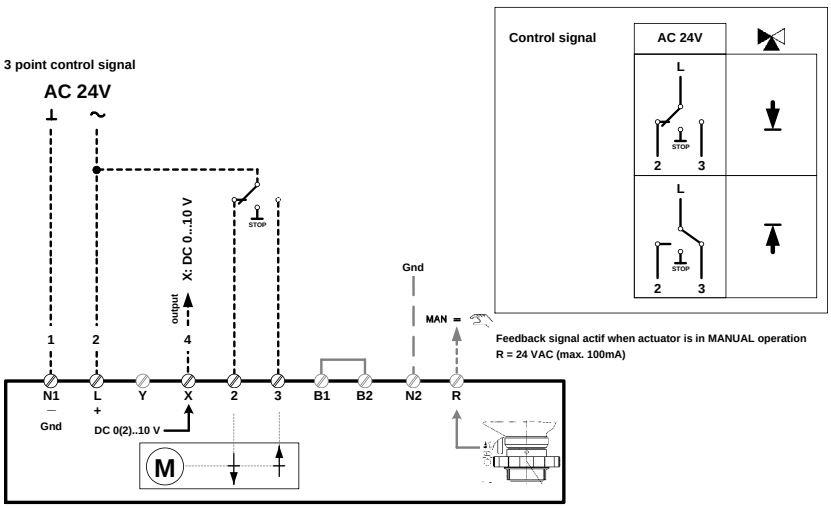


B1/B2 connection of a binary signal (DI)

### AC 230 VOLT 3-POINT CONTROL SIGNAL

60U29 / 80U29

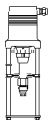

160U24

250U22 / 500U22

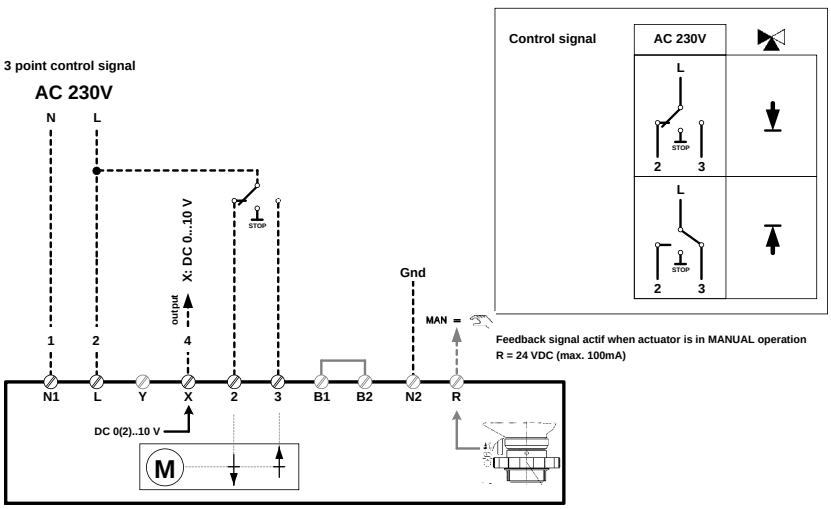


B1/B2 connection of a binary signal (DI)

N2 is the zero potential for the „X“, „Y“ and „R“ signals.

- 24 VAC(DC) : it is recommended to connect N2 in case of actuators in 24 VAC(DC) design.
- 230 VAC : if the actuators in 230 VAC design are to be triggered on the „continuous“ mode of operation, i.e. by analogue signal „Y“, the connection of N2 (zero potential of the controller) is absolutely necessary. For actuators in 230 VAC design the connection N2 in the „3-position“ mode of operation is only necessary if „X“ and/or „R“ are to be use by the actuator. If the zero potentials of the signals X, Y and R are identical with the zero potential of the supply voltage, a bridge can be laid between N1 and N2 in order to save an additional lead to N2.

Specialized periphery Integrator in HVAC

## ELECTRICAL WIRING

### AC 230 VOLT MODULATING CONTROL SIGNAL 0-10VDC

60U29 / 80U29

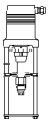

160U24

250U22 / 500U22

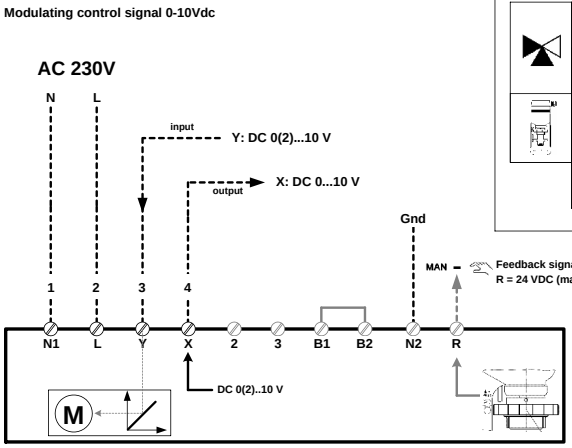


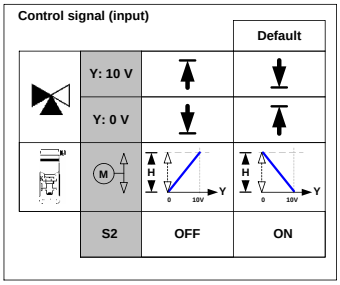


B1/B2 connection of a binary signal (DI)

### AC 230 VOLT MODULATING CONTROL SIGNAL 4-20MA

60i29 / 80i29

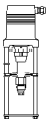

160i24

250i22 / 500i22

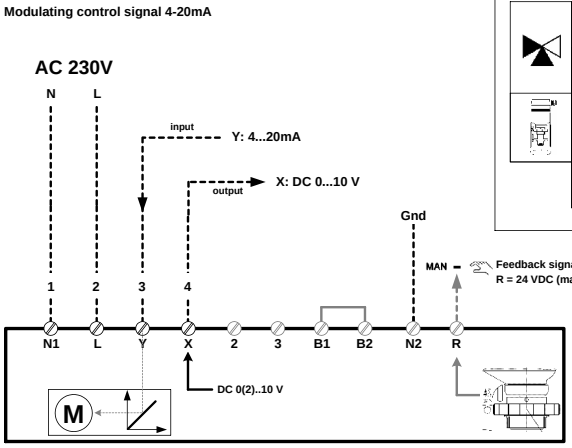


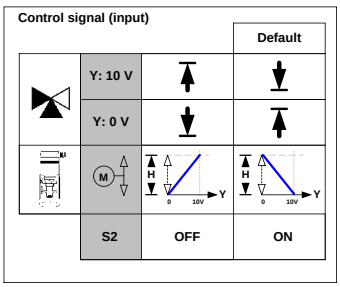


B1/B2 connection of a binary signal (DI)

N2 is the zero potential for the „X“, „Y“ and „R“ signals.

- 230 VAC : if the actuators in 230 VAC design are to be triggered on the „continuous“ mode of operation, i.e. by analogue signal „Y“, the connection of N2 (zero potential of the controller) is absolutely necessary. For actuators in 230 VAC design the connection N2 in the „3-position“ mode of operation is only necessary if „X“ and/or „R“ are to be use by the actuator. If the zero potentials of the signals X, Y and R are identical with the zero potential of the supply voltage, a bridge can be laid between N1 and N2 in order to save an additional lead to N2.



© Belparts NV
Wingepark 4
B-3110 Rotselaar
Tel : +32 (0)16 26 93 00
E-mail: info@belparts.be

© Belparts NV
Postbus 317
NL-3830 AJ Leusden
Tel : +31 (0)33 432 18 35
E-mail: info@belparts.nl

© Belparts France SARL
1, rue de la Haye - BP 12910
F-95731 Roissy CGD Cedex
Tel : +33 (0)1 49 19 22 93
E-mail: info@belparts.fr

Subject to changes without prior notice

PN 6

flanged

## DRAWING

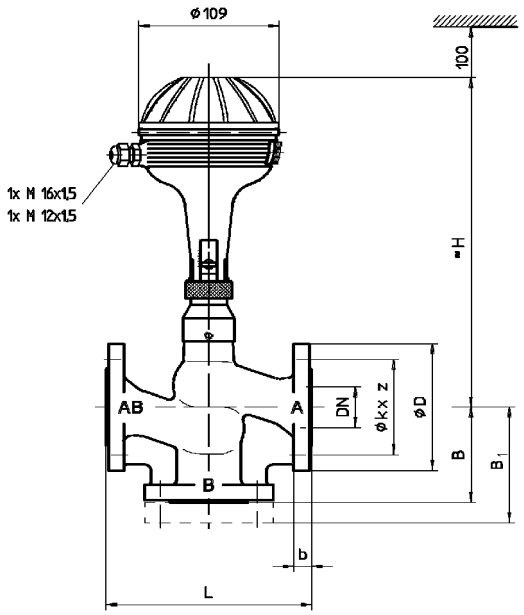


**CD2F../CD3F..** with series **45..**

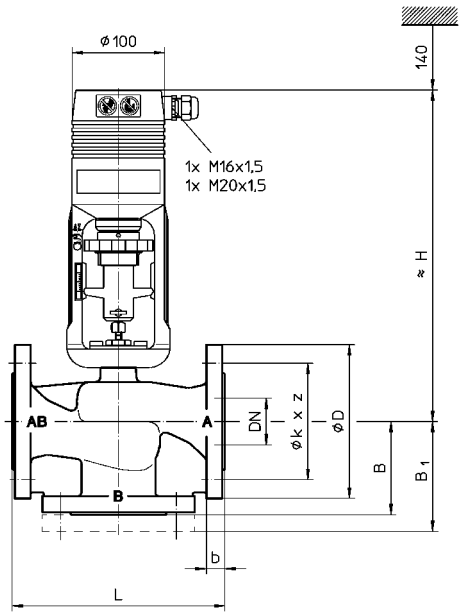


**CD2F../CD3F..** with series **60.. or 80..**

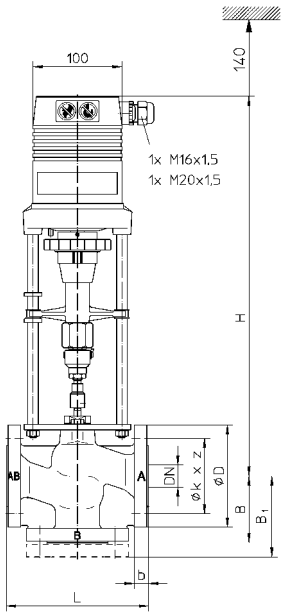


**DN 32 – DN 50**

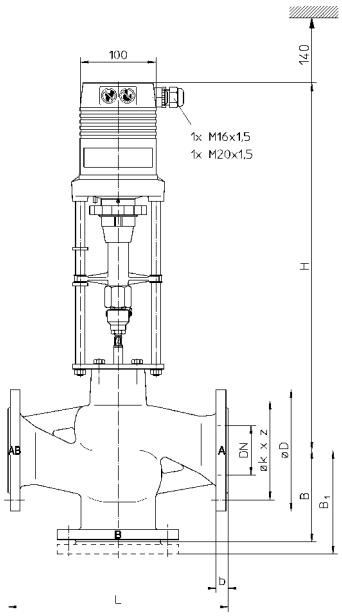


**DN 65 – DN 100**

**CD2F../CD3F..** with series **160..**



© Belparts NV
Wingepark 4
B-3110 Rotselaar
Tel : +32 (0)16 26 93 00
E-mail: info@belparts.be

© Belparts NV
Postbus 317
NL-3830 AJ Leusden
Tel : +31 (0)33 432 18 35
E-mail: info@belparts.nl

© Belparts France SARL
1, rue de la Haye - BP 12910
F-95731 Roissy CGD Cedex
Tel : +33 (0)1 49 19 22 93
E-mail: info@belparts.fr

Subject to changes without prior notice

PN 6

flanged

## DRAWING

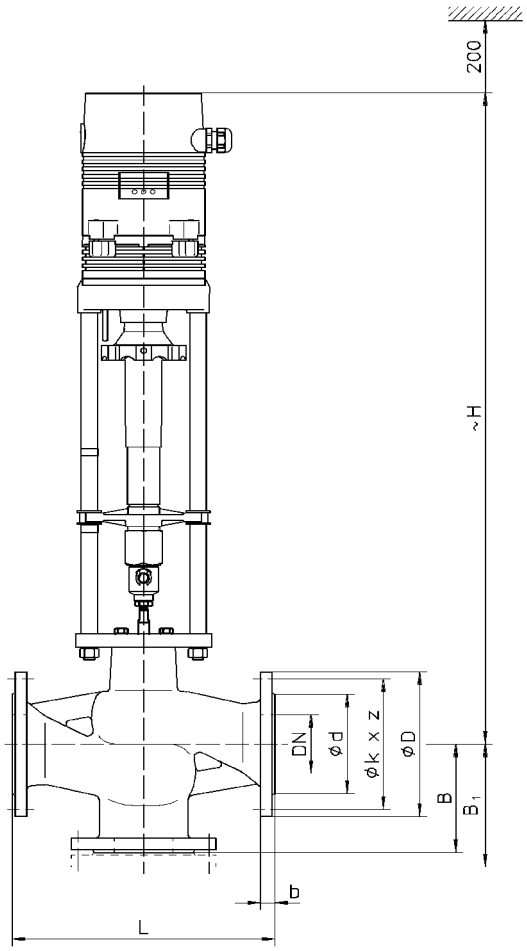


**CD2F../CD3F..** with series **250..** or **500..**



© Belparts NV
Wingepark 4
B-3110 Rotselaar
Tel : +32 (0)16 26 93 00
E-mail: info@belparts.be

© Belparts NV
Postbus 317
NL-3830 AJ Leusden
Tel : +31 (0)33 432 18 35
E-mail: info@belparts.nl

© Belparts France SARL
1, rue de la Haye - BP 12910
F-95731 Roissy CGD Cedex
Tel : +33 (0)1 49 19 22 93
E-mail: info@belparts.fr

Subject to changes without prior notice

PN 6

flanged

## DIMENSIONS / WEIGHTS

| DN | | | | 15 | 20 | 25 | 32 | 40 | 50 | 65 | 80 | 100 |
|---|---|---|---|---|---|---|---|---|---|---|---|---|
| L | | | mm | 130 | 150 | 160 | 180 | 200 | 230 | 290 | 310 | 350 |
| B | | | mm | 65 | 70 | 75 | 95 | 100 | 100 | 120 | 130 | 150 |
| $B_1$ | | | mm | 86 | 93 | 98 | 119 | 124 | 124 | 144 | 158 | 178 |
| ∅ D | | | mm | 80 | 90 | 100 | 120 | 130 | 140 | 160 | 190 | 210 |
| ∅ k | | | mm | 55 | 65 | 75 | 90 | 100 | 110 | 130 | 150 | 170 |
| z | | | mm | 4x ∅11 | | | 4x ∅14 | | | | 4x ∅18 | |
| b | | | mm | 12 | 14 | 14 | 16 | 16 | 16 | 16 | 18 | 18 |
| H | 45.. | 24 VAC/230 VAC | mm | 253 | 258 | 263 | 263 | 268 | 268 | | | |
| | 60.. | 24 VAC | mm | 345 | 350 | 355 | 355 | 360 | 360 | | | |
| | | 230 VAC | mm | 370 | 375 | 380 | 380 | 385 | 385 | | | |
| | 80.. | 24 VAC | mm | 345 | 350 | 355 | 355 | 360 | 360 | 410 | | |
| | | 230 VAC | mm | 370 | 375 | 380 | 380 | 385 | 385 | 435 | | |
| | 160.. | 24 VAC | mm | | | | 431 | 436 | 436 | 486 | 496 | 506 |
| | | 230 VAC | mm | | | | 456 | 461 | 461 | 511 | 521 | 531 |
| | 250.. 500.. | 24 VAC | mm | | | | | | | 725 | 735 | 745 |
| | | 230 VAC | mm | | | | | | | 725 | 735 | 745 |
| m | 45.. | CD2F.. | kg | 3.6 | 4.7 | 5.6 | 7.9 | 9.6 | 11.3 | | | |
| | | CD3F.. | kg | 3 | 3.8 | 4.5 | 6.4 | 7.8 | 9.2 | | | |
| | 60.. | CD2F.. | kg | 4.7 | 5.8 | 6.7 | 9 | 10.7 | 12.4 | | | |
| | | CD3F.. | kg | 4.1 | 4.9 | 5.6 | 7.5 | 8.9 | 10.3 | | | |
| | 80.. | CD2F.. | kg | 4.7 | 5.8 | 6.7 | 9 | 10.7 | 12.4 | 19.8 | | |
| | | CD3F.. | kg | 4.1 | 4.9 | 5.6 | 7.5 | 8.9 | 10.3 | 16.6 | | |
| | 160.. | CD2F.. | kg | | | | | 12 | 13.7 | 21.1 | 29.5 | 40.3 |
| | | CD3F.. | kg | | | | | 10.2 | 11.6 | 17.9 | 25.2 | 34.2 |
| | 250.. 500.. 24 VAC | CD2F.. | kg | | | | | | | 24.9 | 33.3 | 44.1 |
| | | CD3F.. | kg | | | | | | | 21.7 | 29.0 | 38.0 |
| | 250.. 500.. 230 VAC | CD2F.. | kg | | | | | | | 26.1 | 34.5 | 45.3 |
| | | CD3F.. | kg | | | | | | | 22.9 | 30.2 | 39.2 |

Specialized periphery Integrator in HVAC

PN 6

flanged

## APPLICATION EXAMPLE

**COMMON MASS CONNECTIONS SHOULD ALWAYS BE RESPECTED !**

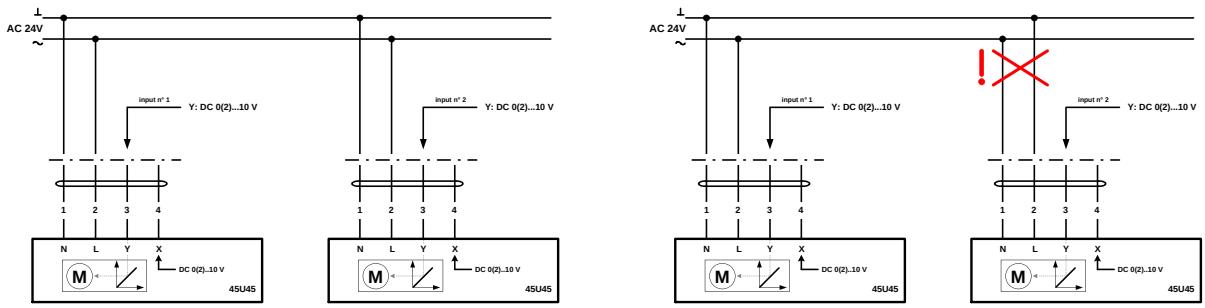


## APPLICATION EXAMPLE

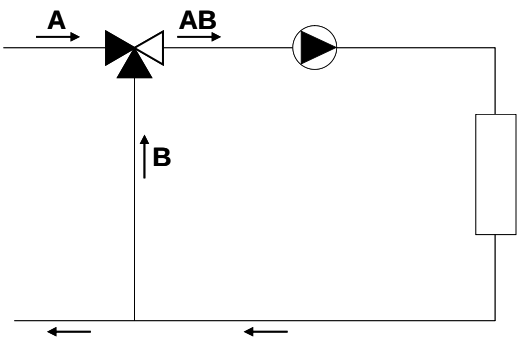


## INSTALLATION INSTRUCTION

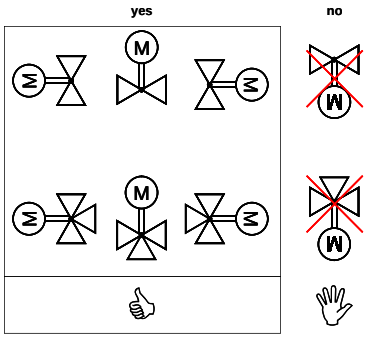


Valve trim could be damaged by dirt in the pipe system.
Therefore we recommend the installation of strainers.

Specialized periphery Integrator in HVAC

© Belparts NV
Wingepark 4
B-3110 Rotselaar
Tel : +32 (0)16 26 93 00
E-mail: info@belparts.be

© Belparts NV
Postbus 317
NL-3830 AJ Leusden
Tel : +31 (0)33 432 18 35
E-mail: info@belparts.nl

© Belparts France SARL
1, rue de la Haye - BP 12910
F-95731 Roissy CGD Cedex
Tel : +33 (0)1 49 19 22 93
E-mail: info@belparts.fr

PN 6

flanged

NOTES



© Belparts NV
Wingepark 4
B-3110 Rotselaar
Tel : +32 (0)16 26 93 00
E-mail: info@belparts.be

© Belparts NV
Postbus 317
NL-3830 AJ Leusden
Tel : +31 (0)33 432 18 35
E-mail: info@belparts.nl

© Belparts France SARL
1, rue de la Haye - BP 12910
F-95731 Roissy CGD Cedex
Tel : +33 (0)1 49 19 22 93
E-mail: info@belparts.fr

Subject to changes without prior notice

PN 6

flanged

NOTES